Robotics and Flexible Manufacturing Systems
J.C. Gentina and S.G. Tzafestas (Editors)
Elsevier Science Publishers B.V. (North-Holland)
© 1992. IMACS. All rights reserved.

Petri Nets as a Specification Language for Manufacturing Systems

Joaquín Ezpeleta and Javier Martínez

Dpto. de Ingeniería Eléctrica e Informática
Universidad de Zaragoza
María de Luna, 3 E-50015 Zaragoza (Spain)
E-mail: {ezpeleta,javier}@etsii.unizar.es

ABSTRACT

This paper presents a method for the specification of flexible manufacturing systems with Petri Nets. We propose a methodology in order to achieve such a specification in two phases: in the first one, the specification of the different subsystems is carried out, meanwhile in the second one we perform the composition of the different specifications taking into account the cooperation and competition relations among the elements of the system. A flexible production plant is specified following the proposed methodology.

1. INTRODUCTION

One way of specifying a system consists in building a model which describes its behaviour. A model of a system constitutes an abstraction in which some fundamental aspects are described while others are either omitted or appear in a simplified way. As far as we intend to model the behaviour of a production system we have to face the difficulty to describe a system of a concurrent nature. In fact, in a production system tasks such as manufacturing tasks, transport tasks, quality control tasks, etc. are carried out in a concurrent manner, while the different elements or subsystems of production, transport, inspection, storing, etc., hold cooperation and competition relations with the shared resources.

Petri nets constitute a specification language of concurrent systems whose most standing-out aspects are:

- They allow to describe the "real" concurrence (other approximations are confined to the description of the "interleaving" among concurrent sequential processes).
- They allow a graphic representation with an easy comprehension even for non expert people.

- Petri nets have a solid mathematical background behind, that has allowed to develop a theory for the analysis and synthesis of models [GoHa 87,VoGR 87]. Nevertheless, it is necessary to point out that this theory is not fully developed yet and that though a considerable set of results is already known there still exist open problems over which further research is being made.
- There exist tools based on this approximation [FeJe 87] for the computer aided design of concurrent systems.

The previous reasons have brought about that some researchers work in the designing of production systems using Petri Nets. Research on application of Petri nets for the designing of automated production systems starts in the 80's [VaCM 82,DuSt 83]. The results produced in the last years can be found, for instance, in [EEE 87,ViBV 88,IEEE 90].

In this work we present the real case of a flexible plant for electric oven manufacturing, and we treat the problems that the specification of their dynamic behaviour poses. The description of the plant and its functional specifications are presented in §2. In section §3, Petri nets are presented as a graphic language for system specifications. The section is illustrated by means of some examples which may help for a better understanding of how it is possible to express specifications related to production problems using this language. An exposition of our methodology for the construction of specification models of production systems and its application to the electric oven manufacturing plant is dealt with in section §4. Finally, conclusions, open problems and bases for future work are presented in §5.

2. A MANUFACTURING PLANT

Figure 2.1 shows the layout of a manufacturing plant for electric ovens. In it, four different kinds of ovens are produced. In the assembling cycle we can distinguish three steps for the production of an oven, carried out in different areas of the plant, such as it is shown in figure 2.1.

The first phase is the pre-assembly one. It is performed in four working posts, each specialised for a type of oven. Each post has a capacity for one oven and has an output buffer with a capacity for storing two ovens.

The second phase, named ***induction***, has as main aim to select ovens among the different pre-assembly lines and to introduce them into the assembly workshop through its loading station.

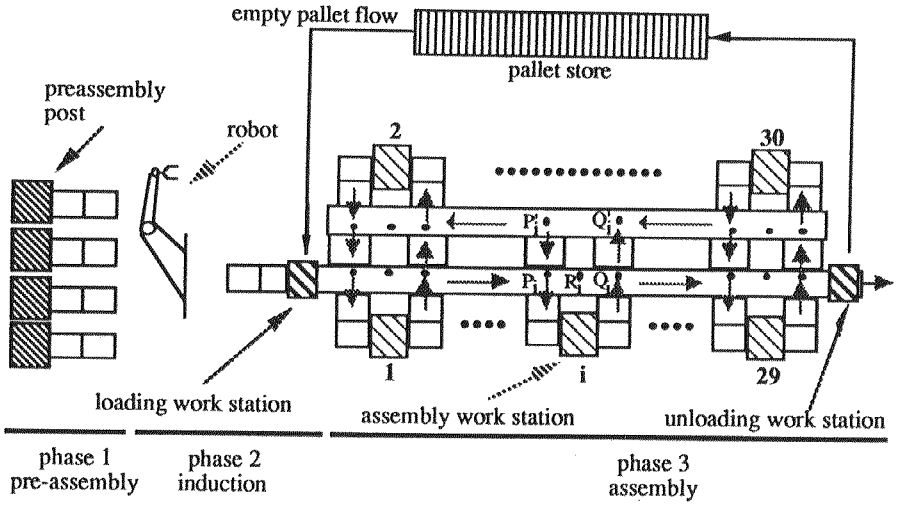

Fig. 2.1: Layout of a manufacturing plant for electric oven assembly

The third phase is the most complex one. In it, the rest of the assembly operations are performed. It is carried out in a ***workshop*** which is composed of thirty work stations and a transport system that guarantees the transport functions for the ovens within the workshop. Each work station has a capacity for one oven and has two buffers associated, an input one and an output one. Both consist in a sequence of two transfer tables and each table may contain one oven.

The workshop transport system is a conveyor belt with a continuous movement. The ovens are introduced into the workshop through the ***loading work station***, in which each oven is fixed to a ***platform or pallet***. The ovens leave the workshop through the ***unloading work station***, in which the pallets are released and the ovens evacuated towards another area in the factory. There exists a mechanism which allows the workstations to be loaded and unloaded. In fact, when one oven reaches every P_i point in the transport system, it is possible to lift the oven and to derive it towards the input buffer of the work station "i". In a similar way, Q_i point has a mechanism associated which allows the output of ovens coming from the output buffer of the work station "i". Beside, from a Q_i point, an oven may be derived towards the P_i' point placed in the opposite side of the conveyor belt.

There exist pallet presence detectors in every work station, in every workshop transfer table and in every P_i and Q_i points in order to make possible the control tasks.

Each oven has a ***working plan*** associated which consists in a sequence of operations to be performed in order to fulfil its assembly. Given that every work station is specialised in a subset of operations, every pallet will visit a sequence of work stations. Some operations can be performed by only one work station, while the rest can be fulfilled by subsets of them. This fact allows a freedom degree in the application of the working plan. Even though the problem of the specification of working plans and station assignation strategies for each operation is behind the aim of this work, we still want to point out that those are basic problems for a production plant control.

In this paper we are going to limit our attention to the oven transport system control specification in the plant. With regard to this subject, the following additional specifications must be taken into account:

- The number of available pallets in the workshop, K, is fixed.
- An oven will remain in a work station output buffer until there is a place in the input buffer of the next work station to visit .
- An oven will try to follow the shortest path in the workshop transport system.
- The safety distance of a forward detector and a backwards one will have to be established before the introduction of an oven in the workshop transport system.
- In the case that one oven reaches its destination and that its input buffer and its working post are full, it will go on moving through the transport system towards the next station where the task can be carried out.

3. PETRI NET SPECIFICATION

A Petri net is a directed graph with two kinds of nodes, named ***places*** and ***transitions***. Pictorially, places are represented by circles and transitions by boxes. Each transition can be joined to either one or several places by means of oriented arcs (from the transition to the place or vice versa). Places in a Petri net have an associated ***marking*** that consists of a non negative number of objects, called tokens. Each token is represented graphically by means of a black dot.

Figures 3.1 and 3.2 show three Petri nets that model specifications related to production systems. The net in Figure 3.1-a models an assembly plan. Places r1, r2 and r3 represent raw materials (non mechanised parts) and transitions Tm_1, Tm_2 and Tm_3 mechanising operations. The mechanised parts (places m_1, m_2, m_3) are assembled in two phases (transitions Ta_{12}, Ta_{123}) finally aiming an assembled product (place a_{123}).

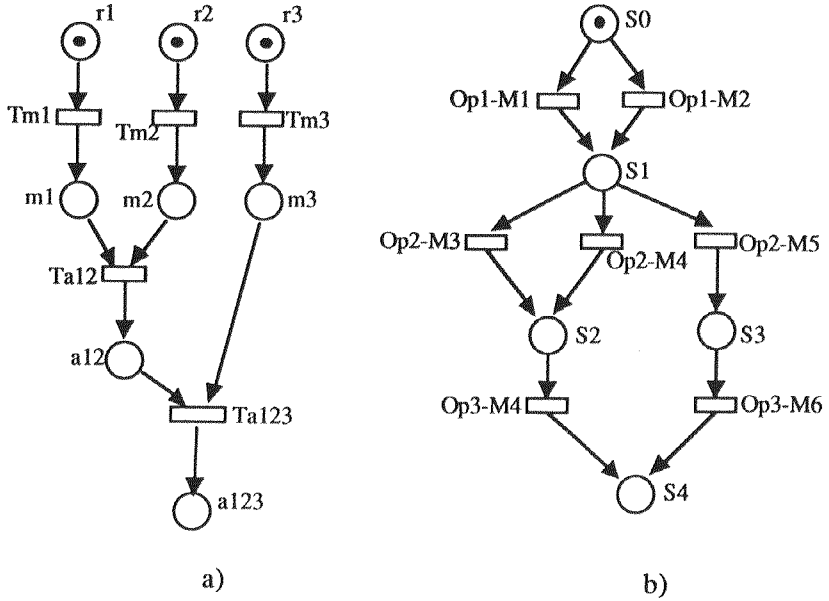

Fig.3.1: Petri nets modelling an assembly plan (a) and a sequential mechanisation plan with alternatives (b)

It is easy to deduce that the presence of a token in a place must be interpreted as the existence of a part in that state associated with the place: raw (r_i), mechanised (m_i), or assembled (a_{ij}).

Net in Figure 3.1-b models a mechanisation plan of a part that requires a sequence of operations (OP_1; OP_2; OP_3); each one of them can be performed by a different machine subset, such as it is specified in the model. The net places specify the different states of a part along the manufacturing process. So, a token in places s_0 or s_4 denotes either its initial manufacturing state or its final one, respectively.

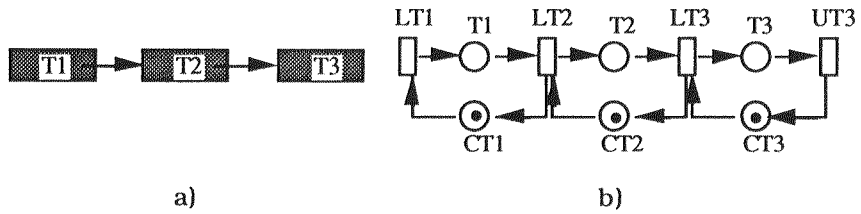

Fig. 3.2: A sequential transport line (a) and a Petri net model (b). Initial marking represents the empty line state

Finally, the net in Figure 3.2-b is a specification model of a sequential transport line composed of three transfer tables, meanwhile places CT_i represent available loading capacities in table T_i. The capacity for each table in this case is one part. Transitions LT_i specify loading operations over a table, whereas transition UT_3 models the unloading of the last table.

The marking of the places of a net may be modified through the ***firing*** of its transitions. So that a transition can be fired it must be ***enabled***, that is, its previous places (places joined to the transition by a arc oriented towards the transition) must have, at least, one token. The firing of a enabled transition consists in withdrawing a token from every previous place, and in adding one to every posterior place (place joined to the transition by a arc oriented towards the place).

4. APPLICATION TO THE SPECIFICATION OF A MANUFACTURING PLANT

Though the plant in Figure 2.1 is devoted to the manufacturing of electric ovens, from now on we are going to use the term part when referring to them.

From a methodological point of view, we will carry on in this way. In a ***first step***, we are going to divide the ***problem of the specification of the behaviour*** of a manufacturing system into a set of subproblems so as to be able to handle it more easily ("*divide and conquer*" strategy, quite common in engineering). Two division criteria are going to be applied:

- Considering every part on its own, leading aside the existence of other parts which may compete for the plant resource, (stations, buffers, robots, transport devices, etc.). Every part has a working plan associated (description of the operation sequence which must be performed over it).
- Considering the manufacturing system as a set of independent subsystem integrated plant.

The first step outcome is a set of independent specifications, and each independent specification is made up by a Petri net. They correspond to:

- each part working plan
- the different paths that a part can go along in every subsystem of the plant.

In ***a second step*** we are going to perform ***the integration of specifications:***

- Considering the ***competition relations*** among the parts with regard to the bounded capacity of the resources they share, (i.e., the robot can only transport one part at a time, or that the capacity of every working station of the assembly workshop is determined by the capacity of its input and output buffers and its own station). The integration is made by linking subnets through ***capacity monitors.*** A capacity monitor is a place that allows to bound the total number of tokens in the set of places associated to an element with a finite capacity. Figure 4.1 shows this way of composition.

- Considering the ***cooperation relations among the subsystems*** of the plant (i.e. the induction phase allows to carry the preassembled parts to the assembling workshop). These relations are implemented by means of ***transition synchronization***, with regard to Petri Nets. Figure 4.2 shows an example of such way of composition.

- Considering the ***cooperation relations among the elements of the plant and the working plans*** (i.e. an operation must be performed over a definite machine, or that the arrangement of a sequence of two operations over different machines requires the cooperation of the transport system to move the respective part), these relations may also be implemented by ***transitions synchronization*** of the respective nets.

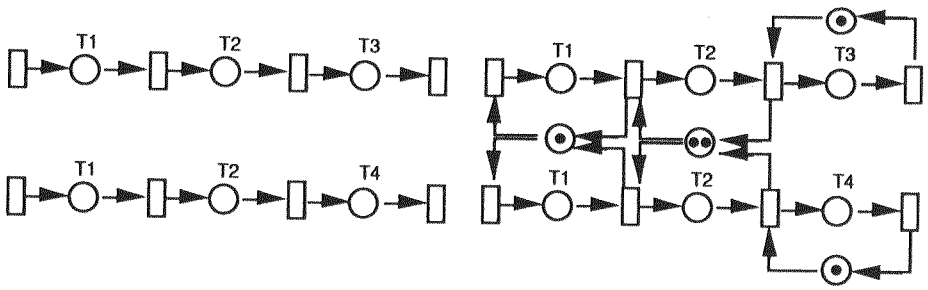

a) Two independent subsystems

b) Composed net by means of capacity monitors

Fig. 4.1: Petri net composition by means of capacity monitors. Resources T1, T3 and T4 have a capacity one, whilst resource T2 has a capacity two.

This second step outcome is an overall specification of the production plant.

Figures 4.3 and 4.4 show the specification of the plant subsystems without taking into consideration capacity restrictions. The production plans associated to each part have an analogous structure to the one shown in Figure 3.1.

In the second step we integrate the specification of the capacity restrictions in machines, buffers, transport elements, handling elements... by means of capacity monitors, the specification of the

transition synchronization which have associated the labels L_i, I_i, O_i and B and the composition between the working plans and the plant model, synchronising each transition of a working plan with the respective I_i loading transition of the station where the operation is going to be carried out.

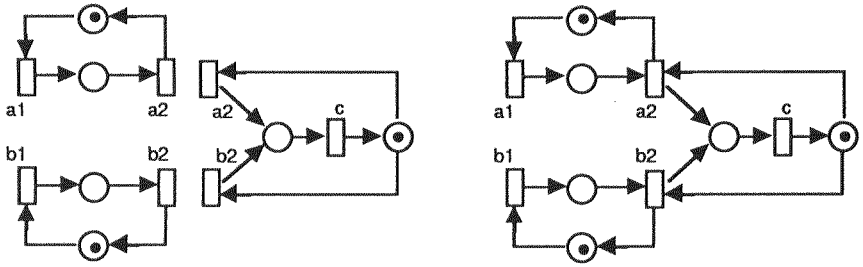

a) Three independent subsystems

b) After synchronization of transitions with same label

Fig. 4.2: Petri net composition by transition synchronization

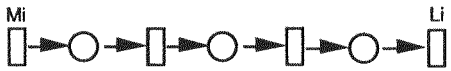

a) Preassembly line "i" model

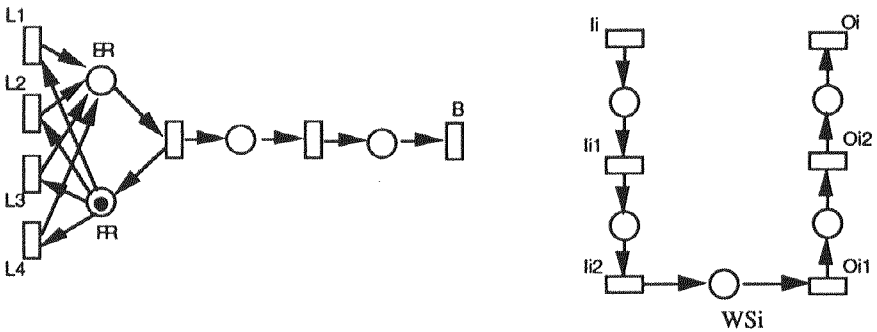

b) Induction phase model

c) Assembly station model

Fig. 4.3: Petri net model of Pre-assembly, Induction and Assembly phases

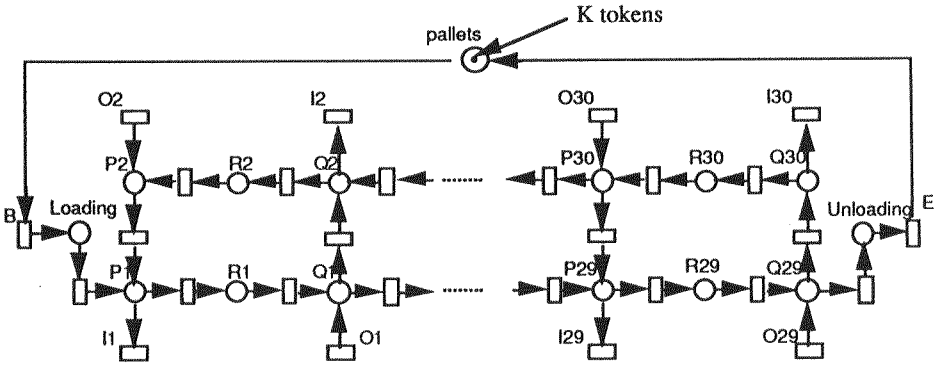

Fig. 4.4: Petri net model of the workshop transport system

5. CONCLUSIONS

In this paper, it is showed that Petri Nets are suitable for the specification of production systems. Using such a formal language of specification as Petri Nets are, allows to get non ambiguous specifications that can be understood by the technical people concerned with the design and with the operation of a production plant.

A key aspect in this work is the methodology of specification building that has been presented. A design is carried out in a modular way, specifying independently the different subsystems of the plant and each working plant associated to the parts. To compose specifications two operations have been proposed: composition of nets through capacity monitors which allow to specify competition relations with regard to the shared resources, and transitions synchronization in order to specify cooperation relations.

The obtained models are Petri Nets open to be exploited either to carry out an analysis of qualitative or quantitative properties or to carry out the realisation of the control system of the plant.

One problem that the resultant Petri net specification poses is its size (its number of places and transitions can be very high). And so, the Petri net graphic representation is difficult to draw and understand. One way of compacting a Petri net without losing expressive power consists in using high level nets [MaAS 86]. This is one of the extension lines of the present work. Another aim of our future research is directed towards the formalisation of the design method presented, trying to give it concrete form as a theory of specification synthesis.

ACKNOWLEDGEMENTS

This work has been supported by the EEC, project DEMON (Esprit Basic Research Action 3148), and by the Spanish Comisión Interministerial de Ciencia y Tecnología, CICYT, project TIC-91/0354.

REFERENCES

[DuSt83] D.Dubois,K.Stecke: Using Petri nets to represent production processes, in Proc. of the *22nd IEEE Conference on Decision and Control, San Antonio*, Texas, 1983, pp. 1062-1067

[FeJe87] F.Feldbrugge, K.Jensen: Petri net tool overview 1986, in *(Goos,Hatmanis 87)*, pp. 20-61

[GoHa 87] G.Goos, J.Hartmanis (eds.), *Petri Nets: Applications and Relationship to Other Models of Concurrency*, L.N.C.S. 255, Springer-Verlag.

[IEEE 87] *Proc. of the 1987 IEEE International Conference on Robotics and Automation*, Vol, 2, April, Raleigh, North Carolina, IEEE Computer Society Press, pp. 999-1018 and pp. 1160-1185

[IEEE 90] *Proc. of the IEEE Rensselaer's Second International Conference on Computer Integrated Manufacturing*, May, 1990, Troy, New York

[MaAS 86] J.Martínez,H.Alla,M.Silva: Petri nets for the specification of FMS, in *Modelling and Design of Flexible Manufacturing Systems*, A.Kusiak (ed.), Elsevier Science Publ., Amsterdam, 1986, pp. 389-406

[VaCM 82] R.Valette,M.Courvoisier,D.Mayeux: Control of flexible manufacturing production systems and Petri nets, in Proc. of the *3rd European Workshop on Application and Theory of Petri Nets*, Varenna, Italy, September, 1982, pp. 264-277

[ViBV 88] R.Vichnevetsky, P.Borne, J.Vignes, *Proc. of the 12th IMACS World Congress on Scientific Computation*, Vol. 3, Paris, July, 1988, pp. 479-561

[VoGR 87] K.Voss,H.J.Genrich,G.Rozenberg, *Concu-rrency and Nets*, Springer-Verlag